NO.	NAME	MATERIAL
1	HOUSING	PBT / Nylon
2	PIN TERM.	PHOS. BRONZE
3	SHELL	BRASS / SPCC
4	SHELL	BRASS
5	COVER SHELL	BRASS / SPCC

REV	ZONE	REVISION	DATE	APPD.

SUA-210H∗-∗∗∗

- Series
- Type
- Color
  - B : Black
  - W : White
- Material
  - B : PBT
  - P : Nylon
- Version
  - 1 : 1.1(1~3u")
  - 2 : 2.0(30u"± 5%)
- Shell
  - N : Nickel Plated
  - T : Tin Plated
  - F : SPCC

SUGGESTED PCB LAYOUT
TOP VIEW

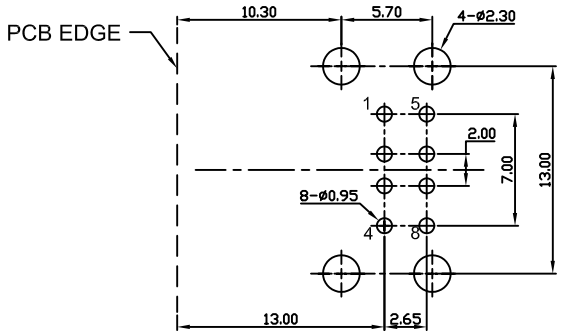

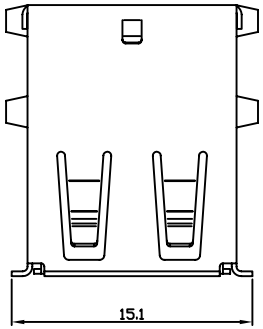

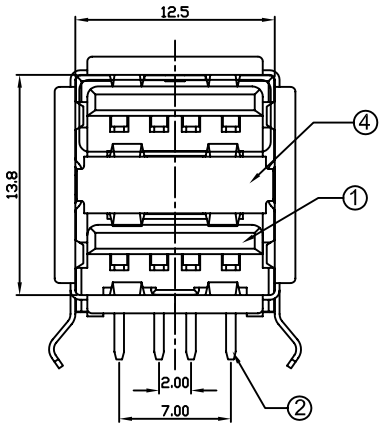

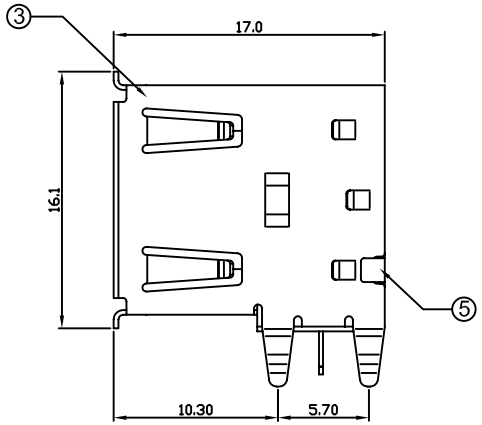

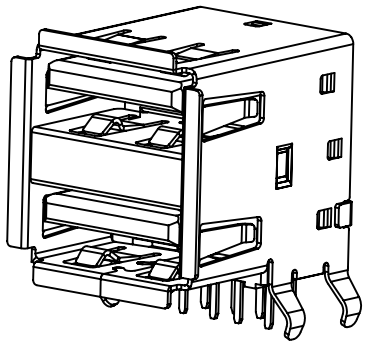

APPROVED BY	COMPUTER NO.			UNIT	SCALE	PART NAME	
KINSWOOD ELECTRONICS CORP.				mm	1 : 1	DOUBLE USB. TYPE A	
	APPD.	CKD.	DWG.	DATE	TOLERANCE		REV.
MODEL: SUA-210H∗-∗∗∗ / PAGE 1 OF 1		Michael	Valiant	2007-01-26	0.000mm ± 0.075mm 0.00 mm ± 0.15 mm 0.0 mm ± 0.25 mm		A.0